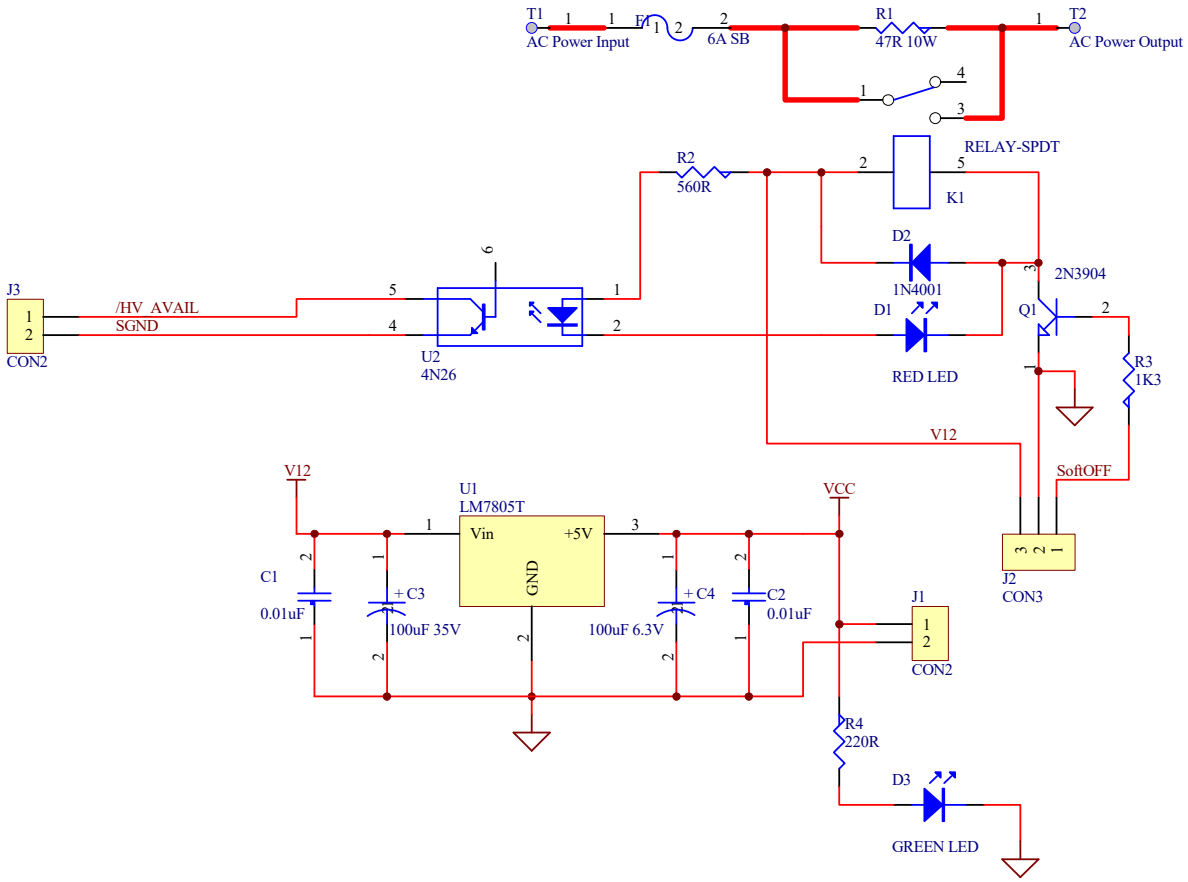

AUTOMATION ARTISANS INC.

Automation Artisans Inc.
2335 Tanner Road
Victoria BC
CANADA. V8Z 5P8
250-884-7277

Soft Start Relay Controller
P:\DC_Servo\LoadShunt\Drawings\LoadShunt.Ddb
SoftStart.prj

Size	FCSM No.	DWG No.	Rev
Letter	08DEC20		1.10a

Scale		Sheet
		1 of 1